MALE END VIEW	FEMALE END VIEW	WIRING DIAGRAM	SPECIFICATIONS	
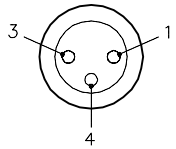	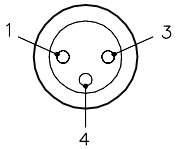	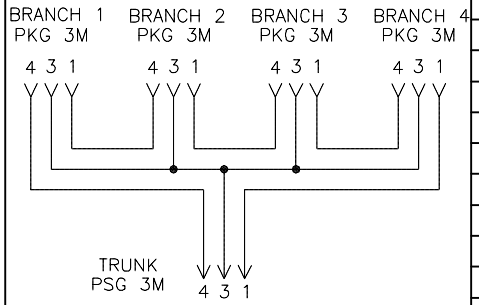	CONTACT CARRIER MATERIAL/COLOR	NYLON OR TPU/BLACK
			MOLDED HEAD MATERIAL/COLOR	TPU/YELLOW
			CONTACT MATERIAL/PLATING	BRASS/GOLD
			COUPLING NUT MATERIAL/PLATING	BRASS/NICKEL
			RATED CURRENT [A]	2.0 A
			RATED VOLTAGE [V]	60 VAC/75 VDC
			OUTER JACKET MATERIAL/COLOR	PVC/YELLOW
			CONDUCTOR INSULATION MATERIAL	PVC
			NUMBER OF CONDUCTOR [AWG]	3x24 AWG
			TEMPERATURE RATING	−40°C to +105°C (−40°F to +105°F)
			PROTECTION CLASS	MEETS NEMA 1,3,4,6P AND IEC IP67

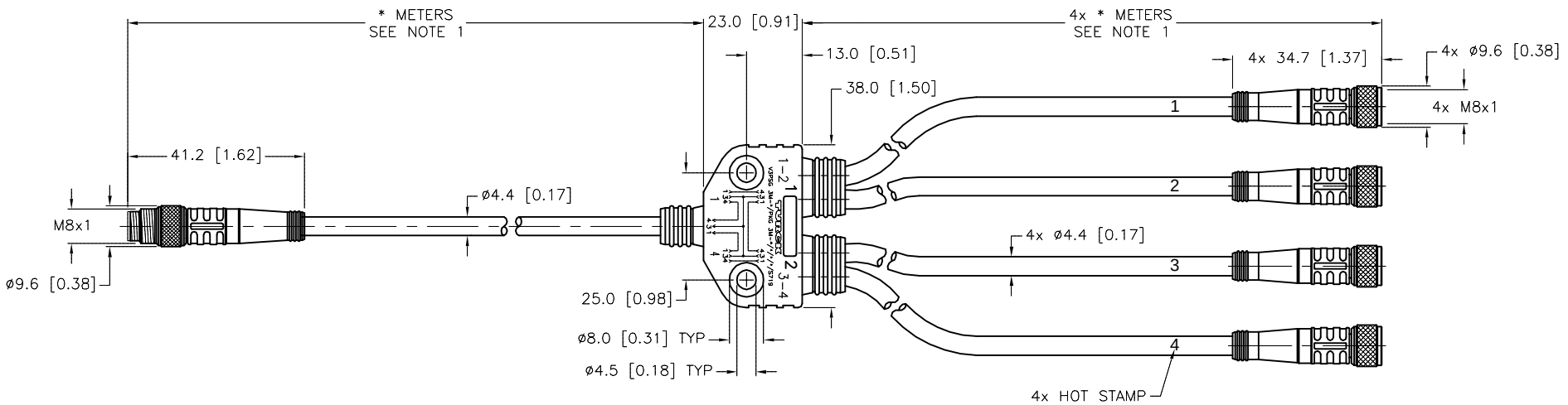

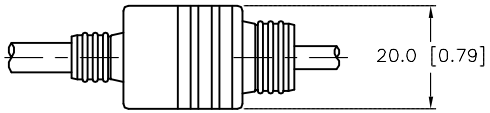

CABLE LENGTH	TOLERANCE *
ALL LENGTHS	+ 4% (OR 50mm) OF LENGTH − 0% (OR 0mm) OF LENGTH WHICHEVER IS GREATER
STRIP LENGTH	**TOLERANCE ***
0−7mm	±0.5mm
8−29mm	±1.0mm
30−49mm	±2.0mm
50−69mm	±3.0mm
70−100mm	±4.0mm
OVER 100mm	±5.0mm
* UNLESS OTHERWISE SPECIFIED	

NOTES:

1. "*" INDICATES CABLE LENGTH IN METERS. CONTACT TURCK TO ORDER SPECIFIC LENGTHS.

2. "/S719" DESIGNATES SERIES WIRING.

SOURCE DRAWING - FOR REFERENCE ONLY

REV	DESCRIPTION	BY	DATE	ECO NO.
C	UPDATE MALE COUPLING NUT	RDS	05/13/13	40191

RELATED DOCUMENTS
1.
2.
3.
4.

3RD ANGLE PROJECTION

THIS DRAWING IS CONFIDENTIAL AND THE PROPERTY OF TURCK INC. USE OF THIS DOCUMENT WITHOUT WRITTEN PERMISSION IS PROHIBITED.

TURCK INC
High Technology Sensors and Automation Controls

3000 CAMPUS DRIVE
MINNEAPOLIS, MN 55441
1−800−544−7769
(763) 553−7300
(763) 553−0708 fax
turck.com

MATERIAL: SEE SPECIFICATIONS

FINISH: SEE SPECIFICATIONS

ALL DIMENSIONS DISPLAYED ON THIS DRAWING ARE FOR REFERENCE ONLY

CONTACT TURCK FOR MORE INFORMATION

DRFT: RWC | DATE: 10/24/06
APVD: | SCALE: 1=1.5

UNIT OF MEASUREMENT
MILLIMETER [INCH]
DO NOT SCALE THIS DRAWING

DESCRIPTION: V3PSG 3M−*/PKG 3M−*/*/*/*/S719

IDENTIFICATION NO.:

REV: C

FILE: 777014308

SHEET 1 OF 1

Approved 06/20/2013, work order #41732 by J.S.